Physics Ch 4
wKst 4B

1) Given: $V_i = 173\ Km/h$
$V_f = \emptyset$
$\Delta X = .660\ m$
$m = 70.0\ Kg$

Find: Force during crash
$F = ?$
$a = ?$

Soln.:

$$V_i = \left(\frac{173\ Km}{hr}\right)\left(\frac{1000\ m}{Km}\right)\left(\frac{1\ hr}{3600\ s}\right) = 48.1\ m/s$$

$$\cancel{V_f^2}^{\,0} = V_i^2 + 2a\Delta X$$

$$a = -\frac{V_i^2}{2\Delta X} = -\frac{(48.1\ m/s)^2}{2(.660\ m)} = -1.75 \times 10^3\ m/s^2$$

Crash: $F = ma = (70.0\ Kg)(-1.75 \times 10^3\ m/s^2)$

$$F = -1.23 \times 10^5\ N$$

Gravity: $F_g = (70.0\ Kg)(9.81\ m/s^2)$

$$F_g = 687\ N$$

$$\frac{1.23 \times 10^5\ N}{687\ N} = 178$$

force of deceleration. Almost 178x more than his weight

2) Given: $m = 2.232 \times 10^6$ Kg
$g = 9.81$ m/s^2
Net Accel = 0

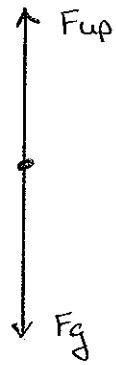

Find: A) $F_{net} = ?$
B) 30.0°, same force in A) what is Accel?

Soln:

Forces in Y direction

$$\Sigma F_y = ma$$

$$F_{up} - F_g = m\cancel{a}^{\,0} \qquad \text{Net Accel} = 0$$

$$F_{up} = F_g$$

$$F_g = mg$$

$$F_{up} = mg$$

$$= (2.232 \times 10^6 \text{ Kg})(9.81 \text{ m/s}^2)$$

$$\boxed{F_{up} = 2.19 \times 10^7 \text{ N}}$$

$$F_g = mg$$
$$= \text{" "}$$
$$= 2.19 \times 10^7 \text{ N}$$

Physics Ch4
WKst 4B

2) cont.
Part B)

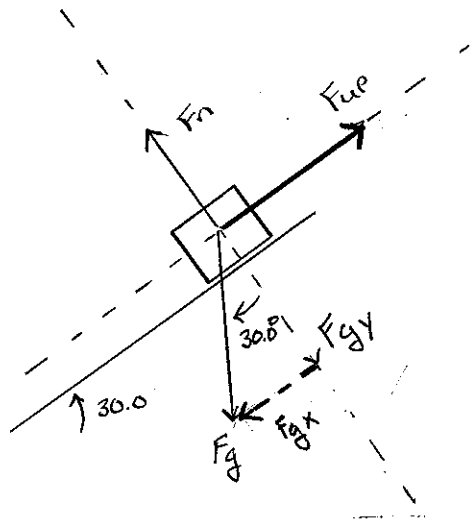

$F_{up} = 2.19 \times 10^7 N$
$m = 2.232 \times 10^6 Kg$
$g = 9.81 m/s^2$

Soln:

$F_{gx} = F_g \sin\phi$
$F_g = mg$
$= mg \sin\phi$
$= (2.232 \times 10^6 Kg)(9.81 m/s^2) \sin 30.0°$
$F_{gx} = 1.09 \times 10^7 N$

$F_{gy} = F_g \cos\phi$
$F_g = mg$
$= mg \cos\phi$
$= (2.232 \times 10^6 Kg)(9.81 m/s^2) \cos 30.0°$
$F_{gy} = 1.90 \times 10^7 N$

Forces X-direction

$\Sigma F_x = ma_x$

$F_{up} - F_{gx} = ma_x$

• Solve for a_x

$a_x = \frac{F_{up} - F_{gx}}{m}$

$= \frac{2.19 \times 10^7 N - 1.09 \times 10^7 N}{2.232 \times 10^6 Kg}$

$\boxed{a_x = 4.93 m/s^2}$

Forces in y direction

$\Sigma F_y = m\cancel{a}^{0}$ No movement in y

$F_n - F_{gy} = 0$

$F_n = F_{gy}$

$\boxed{F_n = 1.90 \times 10^7 N}$